Dimension

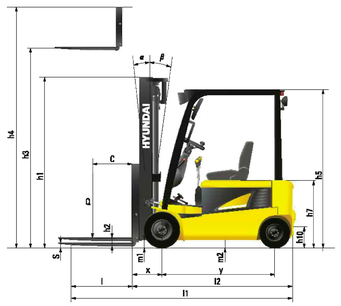

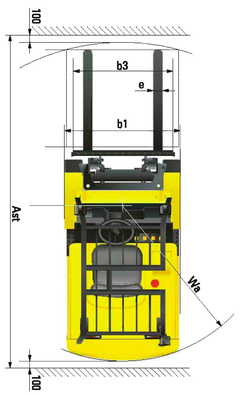

Specification

Identification					
1. 1	Manufacturer		HYUNDAI	HYUNDAI	HYUNDAI
1. 2	Manufacturer´s type designation		16B-7	18B-7	20B-7
1. 3	Drive : electric(battery or mains) ,diesel, petrol ,fuel gas, manual		ELECTRIC	ELECTRIC	ELECTRIC
1. 4	Type of operation : hand, pedestrian, standing, seated, order - picker		SEATED	SEATED	SEATED
1. 5	Load capacity / rated load	Q kg	1,600	1,750	2,000
1. 6	Load center distance	c mm	500	500	500
1. 8	Load distance, center of drive axle to fork	x mm	360	360	365
1. 9	Wheelbase	y mm	1,355	1,440	1,440
Weights					
2. 1	Service weight	kg	2,995	3,195	3,300
2. 2	Axle loading, loaded front / rear	kg	4,094/501	4,403/592	4,724/576
2. 3	Axle loading , unloaded front / rear	kg	1,463/1,532	1,513/1,682	1,513/1,787
Wheels, Chassis					
3. 1	Tires : solid rubber, superelastic, pneumatic, polyurethane		SE	SE	SE
3. 2	Tires size, front(⌀ x width)		18x7-8	18x7-8	200/50-10
3. 3	Tires size, rear(⌀ x width)		16x6-8	16x6-8	16x6-8
3. 5	Wheels, number front rear(x = driven wheels)		2x/2	2x/2	2x/2
3. 6	Track width, front	mm	895	895	905
3. 7	Track width, rear	mm	880	880	880
Basic Dimensions					
4. 1	Mast / fork carriage tilt forward / backward	degrees	5 / 7	5 / 7	5 / 7
4. 2	Lowered mast height	h1 mm	2,120	2,120	2,129
4. 3	Free lift	h2 mm	135	135	140
4. 4	Lift height	h3 mm	3,300	3,300	3,300
4. 5	Extended mast height	h4 mm	4,332	4,332	4,332
4. 7	Overhead load guard (cab) height	h5 mm	1,970	1,970	1,980
4. 8	Seat height	h7 mm	920	920	930
4. 12	Coupling height	h10 mm	250	250	250
4. 19	Overall length	l1 mm	2,931	3,016	3,031
4. 20	Length to face of forks	l2 mm	2,031	2,116	2,131
4. 21	Overall width	b1 mm	1,100	1,100	1,105
4. 22	Fork dimensions	s / e / l mm	900x100x35	900x100x35	900x100x40
4. 23	Fork carriage ISO 2328, class / type A, B		2A	2A	2A
4. 24	Fork - carriage width	b3 mm	980	980	980
4. 31	Ground clearance, loaded, under mast	m1 mm	85	85	94
4. 32	Ground clearance, centre of wheelbase	m2 mm	90	90	100
4. 33	Aisle width for pallets 1,000 x 1,200 crossways	Ast mm	3,370	3,455	3,465
4. 34	Aisle width for pallets 800 x 1,200 length ways	Ast mm	3,190	3,275	3,285
4. 35	Turning radius	Wa mm	1,685	1,770	1,780
4. 36	Smallest pivot point distance	mm	-	-	-
Performance Data					
5. 1	Travel speed, loaded / unloaded	(48V) km/h	16/17	16/17	16/17
		(36V) km/h	15/16	15/16	15/16
5. 2	Lift speed, loaded / unloaded	(48V) mm/s	410/600	410/600	410/600
		(36V) mm/s	330/500	330/500	330/500
5. 3	Lowering speed, loaded / unloaded	mm/s	500/450	500/450	500/450
5. 5	Drawbar pull, S2 30 min	(loaded) N	-	-	-
		(unloaded) N	-	-	-
5. 6	Max. drawbar pull, S2 5 min	(loaded) N	15,102	15,190	14,367
		(unloaded) N	14,759	14,710	14,043
5. 7	Gradient performance, S2 3 min	(loaded) %	-	-	-
		(unloaded) %	-	-	-
5. 8	Max. gradient performance, S2 5 min	(loaded) %	29.5	27.5	24.5
5. 10	Service brake	-	Hydr.	Hydr.	Hydr.
E - Motor					
6. 1	Drive motor rating S2 60 min	(48V / 36V) kW	4.4/3.5	4.4/3.5	4.4/3.5
6. 2	Lift motor rating at S3 - 15% (S2 10min)	(48V / 36V) kW	15.8/9.9	15.8/9.9	15.8/9.9
6. 4	Battery voltage, nominal capacity K5	V / A h	48 / 505	48 / 585	48 / 585
6. 5	Battery weight (min)	kg	710	835	835
	Battery dimensions L / W / H	mm	990/545/636	990/630/636	990/630/636
Other Details					
8.1	Type of drive control		AC	AC	AC

■ Some of the photos may include optional equipment.

We build a better future

16/18/20B-7 AC

FORKLIFT TRUCKS Environmentally - Friendly

HYUNDAI | FORKLIFT
HEAVY INDUSTRIES CO.,LTD.

Head Office(Sales Office)
1 JEONHA-DONG, DONG-GU, ULSAN, KOREA Tel (82) (52) 202-7970, 7729 Fax (82) (52) 202-7979, 7720

U.S. Operation : Hyundai Construction Equipment U.S.A., Inc.
955 ESTES AVENUE, ELK GROVE VILLAGE IL.,60007 Tel (1) 847-437-3333 Fax (1) 847-437-3574

European Operation : Hyundai Heavy Industries Europe N.V.
VOSSENDAAL 11, 2440 GEEL, BELGIUM Tel (32) 14-562200 Fax (32) 14-593405~06

India Operation : Hyundai Construction Equipment India Private Limited
303, 3rd Floor, Siddhivinayak Aurum, 33/1/1/2 Vadgaon Sheri,
Vinam Nagar, Pune 411 014 India Tel 91-20-4003-8160 Fax 91-20-4003-8163

www.hyundai-ce.com

2008. 06 Rev 0.

HYUNDAI
HEAVY INDUSTRIES CO.,LTD.

The New AC Control B Series

Designed with a durable frame and built to offer excellent stability and a smooth ride.
The newly designed AC control forklifts are built to be real workhorses.

■ Some of the photos may include optional equipment.

High Technology ZAPI Controller Eliminate "almost noiseless"

The efficient, 8Khz(high frequency) ZAPI controller provides smooth operation and protection for low & high voltage, overheating and fault recording.

Features
- Regeneration : Direction change, Deceleration, Braking
- The new AC motors offers a of 10% greater efficiency than traditional DC motors Various performance models are available to maximize efficiency and equipped to work in all types of operations
- Enhanced Efficiency
  - H (High) Mode, N (Normal) Mode, E (Economic) Mode
- Turtle Mode : 10km/h

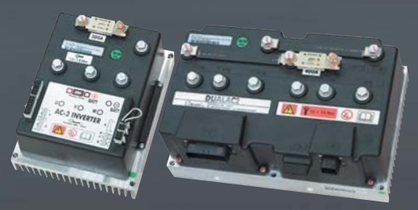

Superior Power with Optimal Performance

Efficient, smooth driving, ergonomically designed,
AC control B series are built to meet your needs.

Fork Safety Features

When the forks are being lowered, a down-control valve maintains the controlled speed. The down-safety valve prevents forks from dropping down in case of sudden damage to the hydraulic lines.

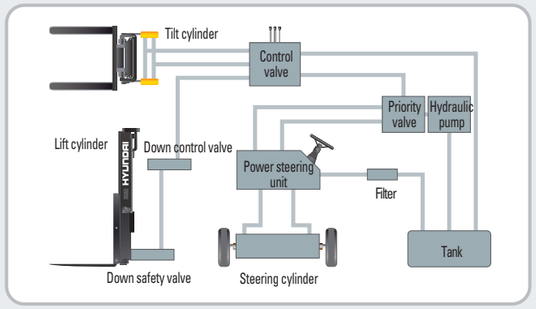

State-of-the-art hydraulic System

The latest large-capacity hydraulic system reacts quickly during operation, and a low noise control valve increases both efficiency and durability.

4-Wheel Center Pivot

The newly designed 4-wheel center pivot allows the forklift to navigate with an extremely small turning radius compared to other forklifts.

Anti-Rollback System, Faster Travel Speed & Gradeability

ZAPI's anti-rollback system provides safe ramp operation plus exceptional ramp start capabilities.
The powerful high-output motors provide greater acceleration, better gradeability and faster travel speed on any tough terrain or slope.

Travel Speed (MAX)

Model	km/h
16B-7	17
18B-7	17
20B-7	17

Gradeability (MAX)

Model	%
16B-7	16.4
18B-7	15.3
20B-7	13.7

Increased Mast tilting Angle

Utilizing the mast tilting angle of 5 degrees forward and 7 degrees backward, the operator can rapidly perform hydraulic functions.

Wet Disc Brake System

The wet disc brake system is virtually maintenance free and is enclosed to protect from dust and water.

Fully Hydrostatic Power Steering

A hydraulic steering system ensures smooth & precise steering which prevents kick-back.

OPSS (Operator Presence Sensing System)

Control of mast tilting, lifting and lowering is not possible through operation of the appropriate control when the operator is not in the seat

Dimension

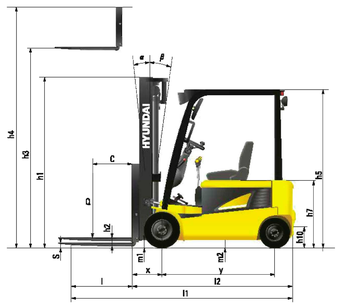

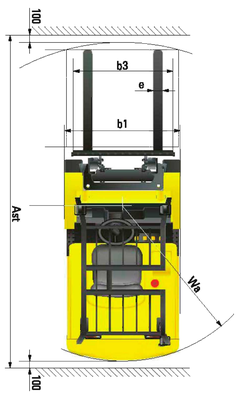

Specification

Identification					
1. 1	Manufacturer		HYUNDAI	HYUNDAI	HYUNDAI
1. 2	Manufacturer´s type designation		16B-7	18B-7	20B-7
1. 3	Drive : electric(battery or mains) ,diesel, petrol ,fuel gas, manual		ELECTRIC	ELECTRIC	ELECTRIC
1. 4	Type of operation : hand, pedestrian, standing, seated, order - picker		SEATED	SEATED	SEATED
1. 5	Load capacity / rated load	Q kg	1,600	1,750	2,000
1. 6	Load center distance	c mm	500	500	500
1. 8	Load distance, center of drive axle to fork	x mm	360	360	365
1. 9	Wheelbase	y mm	1,355	1,440	1,440
Weights					
2. 1	Service weight	kg	2,995	3,195	3,300
2. 2	Axle loading, loaded front / rear	kg	4,094/501	4,403/592	4,724/576
2. 3	Axle loading , unloaded front / rear	kg	1,463/1,532	1,513/1,682	1,513/1,787
Wheels, Chassis					
3. 1	Tires : solid rubber, superelastic, pneumatic, polyurethane		SE	SE	SE
3. 2	Tires size, front(⌀ x width)		18x7-8	18x7-8	200/50-10
3. 3	Tires size, rear(⌀ x width)		16x6-8	16x6-8	16x6-8
3. 5	Wheels, number front rear(x = driven wheels)		2x/2	2x/2	2x/2
3. 6	Track width, front	mm	895	895	905
3. 7	Track width, rear	mm	880	880	880
Basic Dimensions					
4. 1	Mast / fork carriage tilt forward / backward	degrees	5 / 7	5 / 7	5 / 7
4. 2	Lowered mast height	h1 mm	2,120	2,120	2,129
4. 3	Free lift	h2 mm	135	135	140
4. 4	Lift height	h3 mm	3,300	3,300	3,300
4. 5	Extended mast height	h4 mm	4,332	4,332	4,332
4. 7	Overhead load guard (cab) height	h5 mm	1,970	1,970	1,980
4. 8	Seat height	h7 mm	920	920	930
4. 12	Coupling height	h10 mm	250	250	250
4. 19	Overall length	l1 mm	2,931	3,016	3,031
4. 20	Length to face of forks	l2 mm	2,031	2,116	2,131
4. 21	Overall width	b1 mm	1,100	1,100	1,105
4. 22	Fork dimensions	s / e / l mm	900x100x35	900x100x35	900x100x40
4. 23	Fork carriage ISO 2328, class / type A, B		2A	2A	2A
4. 24	Fork - carriage width	b3 mm	980	980	980
4. 31	Ground clearance, loaded, under mast	m1 mm	85	85	94
4. 32	Ground clearance, centre of wheelbase	m2 mm	90	90	100
4. 33	Aisle width for pallets 1,000 x 1,200 crossways	Ast mm	3,370	3,455	3,465
4. 34	Aisle width for pallets 800 x 1,200 length ways	Ast mm	3,190	3,275	3,285
4. 35	Turning radius	Wa mm	1,685	1,770	1,780
4. 36	Smallest pivot point distance	mm	-	-	-
Performance Data					
5. 1	Travel speed, loaded / unloaded	(48V) km/h	16/17	16/17	16/17
		(36V) km/h	15/16	15/16	15/16
5. 2	Lift speed, loaded / unloaded	(48V) mm/s	410/600	410/600	410/600
		(36V) mm/s	330/500	330/500	330/500
5. 3	Lowering speed, loaded / unloaded	mm/s	500/450	500/450	500/450
5. 5	Drawbar pull, S2 30 min	(loaded) N	-	-	-
		(unloaded) N	-	-	-
5. 6	Max. drawbar pull, S2 5 min	(loaded) N	15,102	15,190	14,367
		(unloaded) N	14,759	14,710	14,043
5. 7	Gradient performance, S2 3 min	(loaded) %	-	-	-
		(unloaded) %	-	-	-
5. 8	Max. gradient performance, S2 5 min	(loaded) %	29.5	27.5	24.5
5. 10	Service brake	-	Hydr.	Hydr.	Hydr.
E - Motor					
6. 1	Drive motor rating S2 60 min	(48V / 36V) kW	4.4/3.5	4.4/3.5	4.4/3.5
6. 2	Lift motor rating at S3 - 15% (S2 10min)	(48V / 36V) kW	15.8/9.9	15.8/9.9	15.8/9.9
6. 4	Battery voltage, nominal capacity K5	V / A h	48 / 505	48 / 585	48 / 585
6. 5	Battery weight (min)	kg	710	835	835
	Battery dimensions L / W / H	mm	990/545/636	990/630/636	990/630/636
Other Details					
8.1	Type of drive control		AC	AC	AC

■ Some of the photos may include optional equipment.

We build a better future

16/18/20B-7 AC

FORKLIFT TRUCKS Environmentally - Friendly

HYUNDAI | FORKLIFT
HEAVY INDUSTRIES CO.,LTD.

Head Office(Sales Office)
1 JEONHA-DONG, DONG-GU, ULSAN, KOREA Tel (82) (52) 202-7970, 7729 Fax (82) (52) 202-7979, 7720

U.S. Operation : Hyundai Construction Equipment U.S.A., Inc.
955 ESTES AVENUE, ELK GROVE VILLAGE IL.,60007 Tel (1) 847-437-3333 Fax (1) 847-437-3574

European Operation : Hyundai Heavy Industries Europe N.V.
VOSSENDAAL 11, 2440 GEEL, BELGIUM Tel (32) 14-562200 Fax (32) 14-593405~06

India Operation : Hyundai Construction Equipment India Private Limited
303, 3rd Floor, Siddhivinayak Aurum, 33/1/1/2 Vadgaon Sheri,
Vinam Nagar, Pune 411 014 India Tel 91-20-4003-8160 Fax 91-20-4003-8163

www.hyundai-ce.com

2008. 06 Rev 0.

HYUNDAI
HEAVY INDUSTRIES CO.,LTD.

Comfortable Operation

A design based on human engineering relieves fatigue and increases operator's efficiency.

Adjustable Steering Wheel

Steering wheel can be adjusted by a lever on the right-hand side for the most comfortable operator position.

Easy Control Direction Lever

Finger tip control of forward and reverse lever allows the operator to control the equipment with minimal effort.

Multi-Functional Switch

Integrated multi-functional switch lever enables the driver to operate lights that includes a secondary horn position.

Prompt Response of Operating Control Levers

Only minimal operator's effort is required for precise, safe and productive control.

High visibility for safe operation

The operator is able to work with increased safety and accuracy.

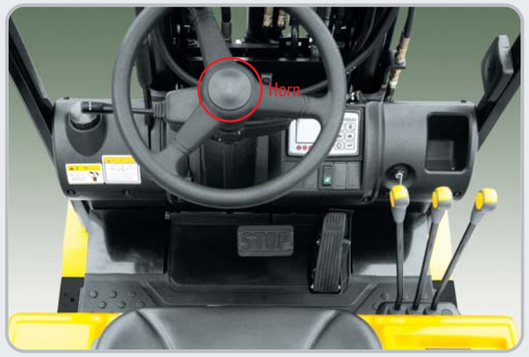

Perfect Fit For Long Work Cycles

An ergonomically designed operator's compartment enables the driver to select the most comfortable working position for increased productivity.

The Ergonomic Pedal Position & Non-slip Mat

Based on human engineering, the accelerator and brake pedals are optimally positioned for convenience while operating the equipment.

Easily Adjustable, Full Suspension Seat

An attractive and adjustable seat, based on a human engineering design, provides greater comfort, safety and durability.

* Options : Seat belt, Arm rest, Hip restraint

AC Control System Features

_Excellent Control Ability
- Various performance modes to meet all working conditions
- Slow rolling on ramp & ramp start

_Enhanced motor efficiency & Excellent regeneration

■ Some of the photos may include optional equipment.

Self - diagnostic LCD Monitor

The LCD monitor has a back-light system to provide a clear view of the system's operation in all environments. The monitor provides information about operation error, system fault, battery level, hour meter and selected performance mode. Other various functions include items such as self diagnostics and password activation. These features are can be accessed without the need of a laptop or handset.

Keyboard Buttons / Performance mode

Operator can select performance mode easily according to working condition.

Console Box & Cup Holder

Additional storage spaces are available on the right side for operator convenience.

High Durability & Simple Arrangement

An ideal arrangement of component parts
ensures easy access and convenience for maintenance.

■ Some of the photos may include optional equipment.

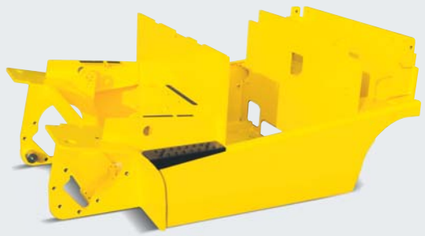

Heavy Duty Single Frame

Heavy duty single type frame, designed on the basis of accurate structural analysis, guarantees durability and safety.

Strong Overhead Guard

The safety overhead guard meets EEC and ANSI regulations and protects the operator during hazardous work.

Parking Brake

Ratchet type parking brake requires less effort from the operator to set.

Hand Grip & Large Footboard

Wide"open"step and large hand grip offer convenience and safety when entering and exiting the truck.

Rear Safety Lamp

Rear combination lamps with turn signal lamps, tail lamp and brake lights are positioned for high visibility to ensure safety.

Battery Locking System

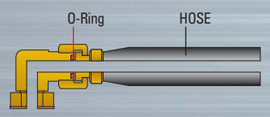

ORFS (O-Ring Face Seal)

ORFS type hose prevents the leaking of hydraulic oil.

High quality AC motors

Enclosed motors prolong durability. No brush and no commutator.
(No arc and no spark)

Easy Maintenance & Serviceability

Easy battery replacement

Battery change is easy with swing-up compartment and slotted overhead guard. Opening and closing of battery cover is made effortless with a gas-spring assist cylinder.

A concentrated fuse box for easy inspection

Oil Tank Port

Steering Sensor

Easy to Check Brake Oil Level

Pump motor

Battery Disconnect Lever

High Visibility Headlights & Rear Work Light

DC-DC Converter

DC-DC converter exceeds UL & CE requirements to prevent short circuit, overload and reverse polarity

Mast Specification (16/18B-7)

Mast Type		Overall Height (Lowered) (mm)		Maximum Fork Height (mm)		Free Lift (mm)				Tilt Angle (deg) Fwd / Bwd		Load Capacity without side shift at 500mm LC (kg)		Load Capacity with side shift at 500mm LC (kg)		Truck Weight (Unloaded) (kg)	
						With Backrest		Without Backrest									
		16B-7	18B-7	16B-7	18B-7	16B-7	18B-7	16B-7	18B-7	16B-7	18B-7	16B-7	18B-7	16B-7	18B-7	16b-7	18B-7
2 / Stage limited free lift	V250	1720	1720	2525	2525	135	135	135	135	5 / 7	5 / 7	1600	1750	1500	1650	2957	3157
	V270	1820	1820	2725	2725	135	135	135	135	5 / 7	5 / 7	1600	1750	1500	1650	2970	3170
	V300	1970	1970	3025	3025	135	135	135	135	5 / 7	5 / 7	1600	1750	1500	1650	2990	3190
	* V330	2120	2120	3325	3325	135	135	135	135	5 / 7	5 / 7	1600	1750	1500	1650	3009	3209
	V350	2220	2220	3525	3525	135	135	135	135	5 / 7	5 / 7	1600	1750	1500	1650	3022	3222
	V370	2320	2320	3725	3725	135	135	135	135	5 / 7	5 / 7	1600	1750	1500	1650	3036	3236
	V400	2470	2470	4025	4025	135	135	135	135	5 / 7	5 / 7	1600	1750	1500	1650	3059	3259
	V450	2820	2820	4525	4525	135	135	135	135	5 / 5	5 / 5	1525	1750	1435	1650	3123	3323
	V500	3070	3070	5025	5025	135	135	135	135	5 / 5	5 / 5	1475	1725	1385	1635	3156	3356
	V550	3320	3320	5525	5525	135	135	135	135	5 / 5	5 / 5	1425	1500	1345	1420	3188	3388
3 / Stage full free lift	TF370	1770	1770	3735	3735	763	763	1264	1264	5 / 5	5 / 5	1600	1750	1500	1650	3107	3307
	TF400	1870	1870	4035	4035	863	863	1364	1364	5 / 5	5 / 5	1600	1750	1500	1650	3122	3322
	TF430	1970	1970	4335	4335	963	963	1464	1464	5 / 5	5 / 5	1550	1750	1450	1650	3142	3342
	TF450	2070	2070	4535	4535	1063	1063	1564	1564	5 / 5	5 / 5	1525	1750	1440	1650	3157	3357
	TF470	2120	2120	4735	4735	1113	1113	1614	1614	5 / 5	5 / 5	1500	1750	1415	1650	3167	3367
	TF500	2220	2220	5035	5035	1216	1216	1714	1714	5 / 5	5 / 5	1475	1725	1395	1625	3187	3387
	TF550	2420	2420	5535	5535	1416	1416	1914	1914	5 / 5	5 / 5	1375	1425	1295	1335	3225	3425
	TF600	2620	2620	6035	6035	1613	1613	2114	2114	5 / 5	5 / 5	1000	1000	930	930	3288	3488
	TF650	2820	2820	6535	6535	1813	1813	2314	2314	5 / 5	5 / 5	950	950	890	890	3332	3532
	TF700	3020	3020	7035	7035	2013	2013	2514	2514	5 / 5	5 / 5	675	675	625	625	3369	3569

* Standard

Mast Specification (20B-7)

Mast Type		Overall Height (Lowered) (mm)	Maximum Fork Height (mm)	Free Lift		Tilt Angle (deg) Fwd / Bwd	Load Capacity without side shift at 500mm LC (kg)	Load Capacity with side shift at 500mm LC (kg)	Truck Weight (Unloaded) (kg)
				With Backrest (mm)	Without Backrest (mm)				
		20B-7	20B-7	20B-7	20B-7	20B-7	20B-7	20B-7	20B-7
2 / Stage limited free lift	V250	1729	2530	140	140	5 / 7	2000	1890	3269
	V270	1829	2730	140	140	5 / 7	2000	1890	3283
	V300	1979	3030	140	140	5 / 7	2000	1890	3302
	* V330	2129	3330	140	140	5 / 7	2000	1890	3322
	V350	2229	3530	140	140	5 / 7	2000	1890	3335
	V370	2329	3730	140	140	5 / 7	2000	1890	3348
	V400	2479	4030	140	140	5 / 7	2000	1890	3372
	V450	2829	4530	140	140	5 / 5	1925	1825	3436
	V500	3079	5030	140	140	5 / 5	1850	1770	3468
	V550	3329	5530	140	140	5 / 5	1775	1715	3501
3 / Stage full free lift	TF370	1779	3740	777	1278	5 / 5	1975	1865	3419
	TF400	1879	4040	877	1378	5 / 5	1925	1825	3435
	TF430	1979	4340	977	1478	5 / 5	1875	1785	3455
	TF450	2079	4540	1077	1578	5 / 5	1850	1760	3470
	TF470	2129	4740	1127	1628	5 / 5	1825	1745	3479
	TF500	2229	5040	1227	1728	5 / 5	1775	1705	3499
	TF550	2429	5540	1427	1928	5 / 5	1700	1630	3537
	TF600	2629	6040	1627	2128	5 / 5	1350	1290	3601
	TF650	2829	6540	1827	2328	5 / 5	1300	1240	3645
	TF700	3029	7040	2027	2528	5 / 5	950	900	3681

* Standard

16/18/20B-7 AC

Load Capacity

16B-7

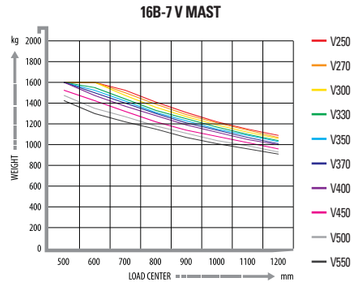

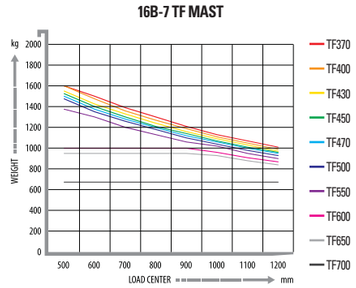

18B-7

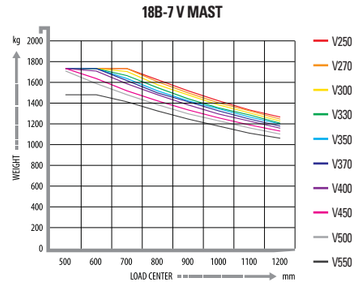

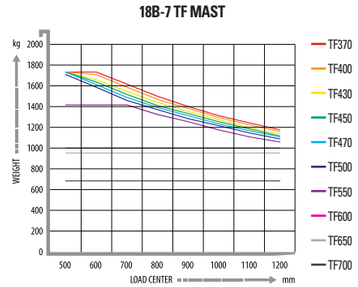

20B-7

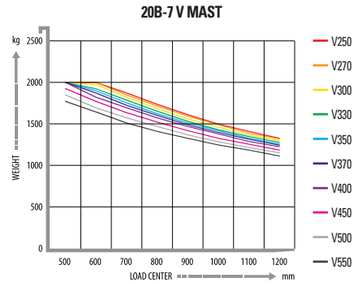

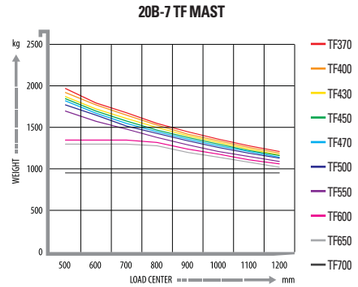

Various Attachments

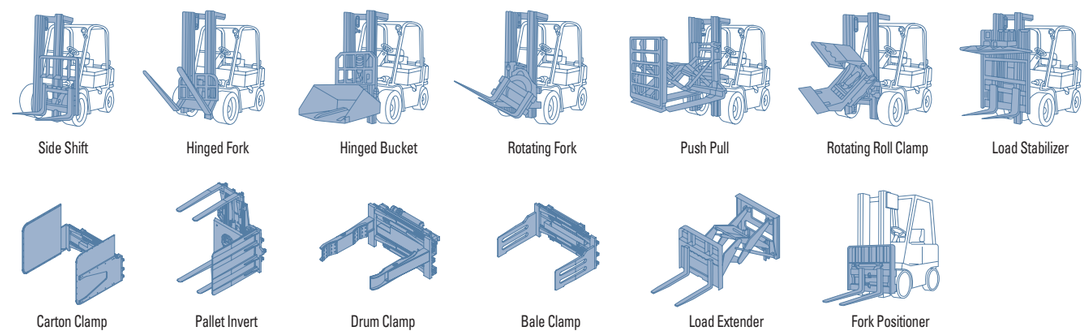

Optional Items

- **Mast**
  - 2-Stage mast (Max. Fork Height)(mm)
    - 16/18B-7
      - -2525 / 2725 / 3025 / 3325 / 3525 / 3725 / 4025 / 4525 / 5025 / 5525
    - 20B-7
      - -2530 / 2730 / 3030 / 3330 / 3530 / 3730 / 4030 / 4530 / 5030 / 5530
  - 3-Stage mast (Max. Fork Height)(mm)
    - 16/18B-7
      - -3735 / 4035 / 4335 / 4535 / 4735 / 5035 / 5535 / 6035 / 6535 / 7035
    - 20B-7
      - -3740 / 4040 / 4340 / 4540 / 4740 / 5040 / 5540 / 6040 / 6540 / 7040
  - Dual free lift 3-Stage Mast (Max. Fork Height)(mm)
    - 16/18B-7
      - -3735 / 4035 / 4335 / 4535 / 4735 / 5035 / 5535 / 6035 / 6535 / 7035
    - 20B-7
      - -3740 / 4040 / 4340 / 4540 / 4740 / 5040 / 5540 / 6040 / 6540 / 7040
- **Side Shift**
  - Side shift, Intergral side shift
- **Valve & Hose Piping**
  - 3 Spool Internal & 4 Spool Internal Type
- **Dual Voltage** : 36/48 Volt
- **UL & CE** : UL Type "E" & "EE"
- **Fork**
  - 16/18B-7(mm)
    - -750 / 850 / 900 / 1050 / 1200 / 1350 / 1500
  - 20B-7(mm)
    - -900 / 950 / 1000 / 1050 / 1200 / 1350 / 1500 / 1600
- **Cold Storage** : Available at -30°C working area
- **Finger Tip Control**
  - Enhanced operator convenience
- **Tire**
  - Solid, Non-Marking

Dimension

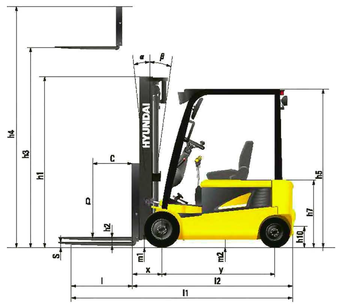

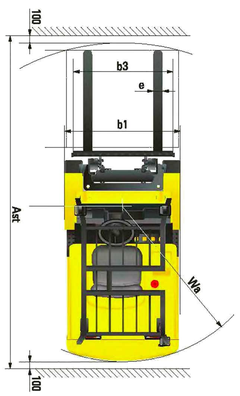

Specification

Identification					
1. 1	Manufacturer		HYUNDAI	HYUNDAI	HYUNDAI
1. 2	Manufacturer's type designation		16B-7	18B-7	20B-7
1. 3	Drive : electric(battery or mains) ,diesel, petrol ,fuel gas, manual		ELECTRIC	ELECTRIC	ELECTRIC
1. 4	Type of operation : hand, pedestrian, standing, seated, order - picker		SEATED	SEATED	SEATED
1. 5	Load capacity / rated load	Q kg	1,600	1,750	2,000
1. 6	Load center distance	c mm	500	500	500
1. 8	Load distance, center of drive axle to fork	x mm	360	360	365
1. 9	Wheelbase	y mm	1,355	1,440	1,440
Weights					
2. 1	Service weight	kg	2,995	3,195	3,300
2. 2	Axle loading, loaded front / rear	kg	4,094/501	4,403/592	4,724/576
2. 3	Axle loading , unloaded front / rear	kg	1,463/1,532	1,513/1,682	1,513/1,787
Wheels, Chassis					
3. 1	Tires : solid rubber, superelastic, pneumatic, polyurethane		SE	SE	SE
3. 2	Tires size, front(⌀ x width)		18x7-8	18x7-8	200/50-10
3. 3	Tires size, rear(⌀ x width)		16x6-8	16x6-8	16x6-8
3. 5	Wheels, number front rear(x = driven wheels)		2x/2	2x/2	2x/2
3. 6	Track width, front	mm	895	895	905
3. 7	Track width, rear	mm	880	880	880
Basic Dimensions					
4. 1	Mast / fork carriage tilt forward / backward	degrees	5 / 7	5 / 7	5 / 7
4. 2	Lowered mast height	h1 mm	2,120	2,120	2,129
4. 3	Free lift	h2 mm	135	135	140
4. 4	Lift height	h3 mm	3,300	3,300	3,300
4. 5	Extended mast height	h4 mm	4,332	4,332	4,332
4. 7	Overhead load guard (cab) height	h5 mm	1,970	1,970	1,980
4. 8	Seat height	h7 mm	920	920	930
4. 12	Coupling height	h10 mm	250	250	250
4. 19	Overall length	l1 mm	2,931	3,016	3,031
4. 20	Length to face of forks	l2 mm	2,031	2,116	2,131
4. 21	Overall width	b1 mm	1,100	1,100	1,105
4. 22	Fork dimensions	s / e / l mm	900x100x35	900x100x35	900x100x40
4. 23	Fork carriage ISO 2328, class / type A, B		2A	2A	2A
4. 24	Fork - carriage width	b3 mm	980	980	980
4. 31	Ground clearance, loaded, under mast	m1 mm	85	85	94
4. 32	Ground clearance, centre of wheelbase	m2 mm	90	90	100
4. 33	Aisle width for pallets 1,000 x 1,200 crossways	Ast mm	3,370	3,455	3,465
4. 34	Aisle width for pallets 800 x 1,200 length ways	Ast mm	3,190	3,275	3,285
4. 35	Turning radius	Wa mm	1,685	1,770	1,780
4. 36	Smallest pivot point distance	mm	-	-	-
Performance Data					
5. 1	Travel speed, loaded / unloaded	(48V) km/h	16/17	16/17	16/17
		(36V) km/h	15/16	15/16	15/16
5. 2	Lift speed, loaded / unloaded	(48V) mm/s	410/600	410/600	410/600
		(36V) mm/s	330/500	330/500	330/500
5. 3	Lowering speed, loaded / unloaded	mm/s	500/450	500/450	500/450
5. 5	Drawbar pull, S2 30 min	(loaded) N	-	-	-
		(unloaded) N	-	-	-
5. 6	Max. drawbar pull, S2 5 min	(loaded) N	15,102	15,190	14,367
		(unloaded) N	14,759	14,710	14,043
5. 7	Gradient performance, S2 3 min	(loaded) %	-	-	-
		(unloaded) %	-	-	-
5. 8	Max. gradient performance, S2 5 min	(loaded) %	29.5	27.5	24.5
5. 10	Service brake	-	Hydr.	Hydr.	Hydr.
E - Motor					
6. 1	Drive motor rating S2 60 min	(48V / 36V) kW	4.4/3.5	4.4/3.5	4.4/3.5
6. 2	Lift motor rating at S3 - 15% (S2 10min)	(48V / 36V) kW	15.8/9.9	15.8/9.9	15.8/9.9
6. 4	Battery voltage, nominal capacity K5	V / A h	48 / 505	48 / 585	48 / 585
6. 5	Battery weight (min)	kg	710	835	835
	Battery dimensions L / W / H	mm	990/545/636	990/630/636	990/630/636
Other Details					
8.1	Type of drive control		AC	AC	AC

■ Some of the photos may include optional equipment.

We build a better future

16/18/20B-7 AC

FORKLIFT TRUCKS Environmentally - Friendly

HYUNDAI | FORKLIFT
HEAVY INDUSTRIES CO.,LTD.

Head Office(Sales Office)
1 JEONHA-DONG, DONG-GU, ULSAN, KOREA Tel (82) (52) 202-7970, 7729 Fax (82) (52) 202-7979, 7720

U.S. Operation : Hyundai Construction Equipment U.S.A., Inc.
955 ESTES AVENUE, ELK GROVE VILLAGE IL.,60007 Tel (1) 847-437-3333 Fax (1) 847-437-3574

European Operation : Hyundai Heavy Industries Europe N.V.
VOSSENDAAL 11, 2440 GEEL, BELGIUM Tel (32) 14-562200 Fax (32) 14-593405~06

India Operation : Hyundai Construction Equipment India Private Limited
303, 3rd Floor, Siddhivinayak Aurum, 33/1/1/2 Vadgaon Sheri,
Vinam Nagar, Pune 411 014 India Tel 91-20-4003-8160 Fax 91-20-4003-8163

сервисКар
ЧЕЛЯБИНСК ЕКАТЕРИНБУРГ

Телефон в Челябинске
+7(351) 772-74-74

Телефон в Екатеринбурге
+7(343) 310-22-20

www.hyundai-ce.com 2008. 06 Rev 0.

HYUNDAI
HEAVY INDUSTRIES CO.,LTD.